AAV 610 Series Rack Mount Redundancy Switching Equipment

Agilis AAV610 Series Rack Mount Redundancy Switching Equipment provides 1:1 redundancy switching capability between two chains of Agilis Rack Mount Equipment, Converters & SSPA.

Agilis Redundancy Switching Equipment performs switching operation when a fault is detected at either of the chains of Converters. The switch over can be automatic or manually controlled by the operator. In the automatic mode, the equipment switches the streams to the operational transceiver. Fault diagnosis can thus be performed on the failed transceiver while maintaining the link. The switch over results in less than half a second of traffic interruption, which is negligible.

Features

- Monitor and control function via LCD panel
- Remote monitor and control via RS232/485 interface

Applications

- Hub and VSAT terminals
- Video conferencing
- Network hubs or remote sites
- Broadcast
- Rural telephony
- Emergency link restoration

Reliability

Field proven with system deployed world-wide. Agilis IDU can withstand temperature from 0°C to +50°C up to 95% non-condensing humidity.

Quality Assurance

All Agilis IDUs are designed and manufactured according to ISO 9001 Standard.

Agilis Communication Technologies Pte Ltd
100 Jurong East Street 21 Singapore Technologies Building Level 4 Singapore 609602 • T. 65 6567 6791 F. 65 6567 6370 mktg@agilis.st.com.sg www.agilis.st.com.sg

TECHNICAL SPECIFICATIONS

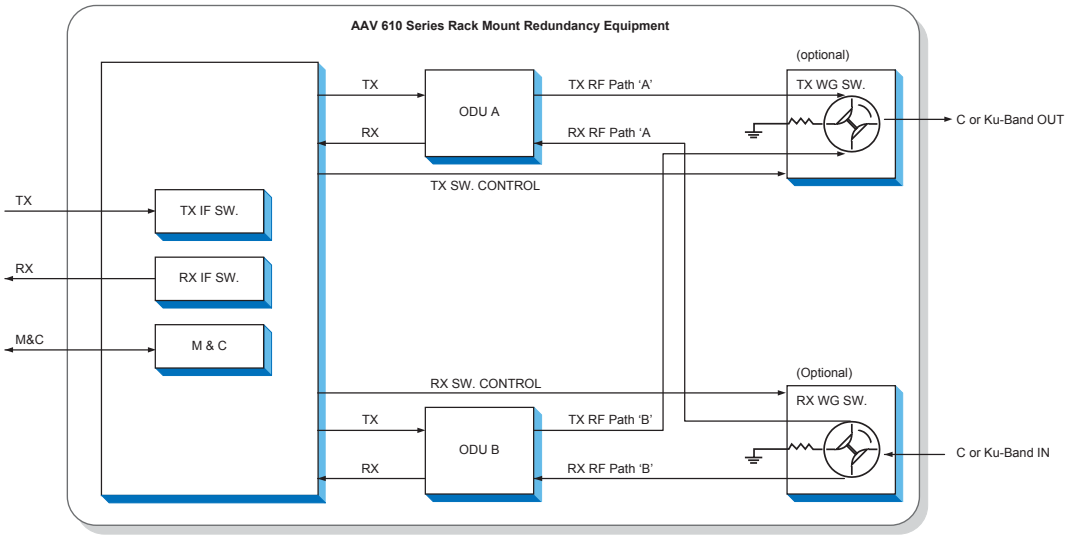

Redundancy Control Unit (RCU)

Frequency Range	C-Band or Ku-Band
Input Power	-28 dBm to -8 dBm
Max. Input Power (without damage)	+20 dBm
VSWR	1.05:1
Impedance	50 Ω
Interface	N-type Female (C-Band) SMA-type Female (Ku-Band)

IF Switches

Insertion Loss	3.0 dB max
Isolation (in-out)	50 dB min

RF Waveguide Transfer Switches

Frequency Band	Ku-Band or C-Band
Insertion Loss	0.05 dB max
Isolation	60 dB min
Switching Time	50 ms max
Actuating Voltage	220Vac nom 110Vac nom (Optional)
Switch Position Indicators	Form "C" relays
VSWR	1.05:1 max
Impedance	50 Ω
Interface	WR75 for Ku-Band CPR137 for C-Band

Environmental

Operating Temperature	0°C to +50°C
Relative Humidity	up to 95% (Non-condensing)

Power Supply

RCU

AC Input Range	220Vac or 110Vac (Factory Preset)
Power Consumption	7W max

Waveguide Transfer Switches

AC Input (via RCU)	220Vac nom, 50/60 Hz 110Vac nom (Optional)
Switching Current	1.4 A type (each for both switches)

Zero current consumption if switch is idle (not switching)

Mechanical

Dimensions	480W x 530D x 90H mm
Weight	5 kg

Note: All specifications are subject to changes without notice